PART NUMBER:

REV.	LOC.	REVISION	DATE

Drawn at 34°

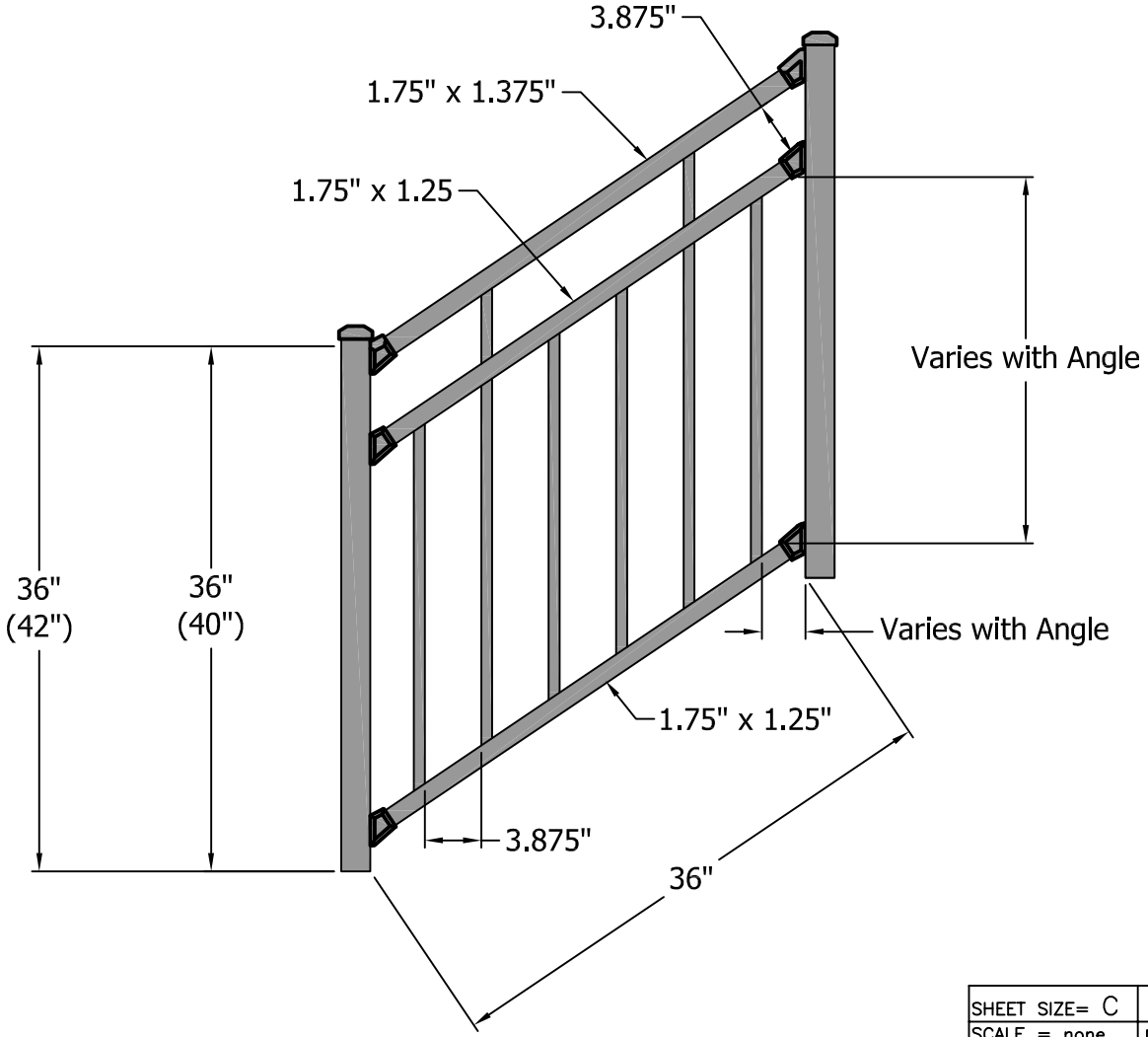

SHEET SIZE= C	DRAWN BY: wjm	PART NUMBER: C33 -3 foot Stair 36" Tall & 42" Tall	
SCALE = none	DATE DRAWN: 11-30-2009		
STANDARD TOLERANCE: .00 ±.01 FRACTIONS: .000 ±.005 ±1/16" ANG. ±.5°	LOC ACAD: Z:/Projects/Projects 2009/C30/	STYLE: Riviera Alt. 2 Picket Top	
DRAFT: 20091130-1	LOC PDF: Z:/Projects/Projects 2009/C30/	FILE NAME: C33 3 foot stair mark	REV.

FINISH:

Digger Specialties, Inc.
3446 US 6 EAST
Bremen, IN 46506