REV.	REVISION	DATE

Stair at 34°

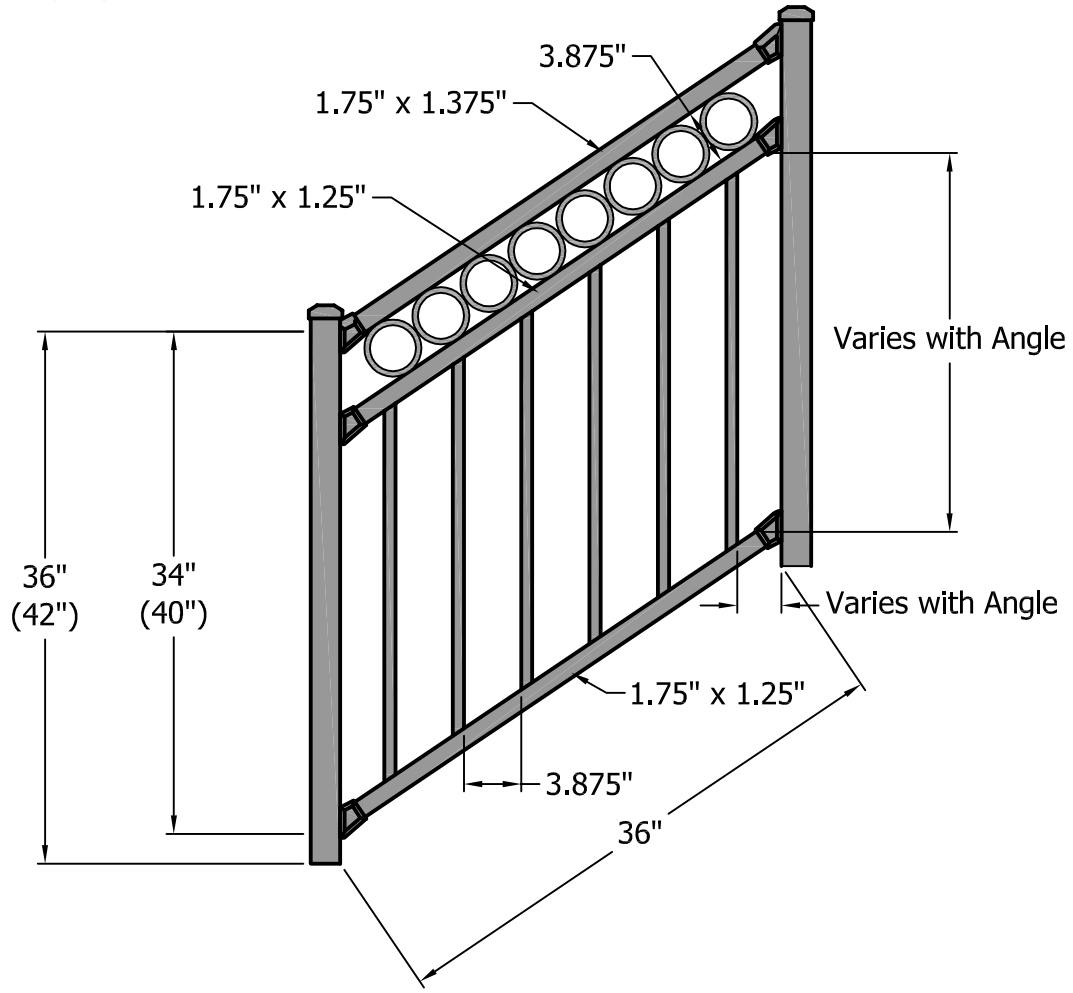

SHEET SIZE= C	DRAWN BY: wjm	PART NUMBER: C30R - 3 foot Stair 36" Tall & 42" Tall	
SCALE = none	DATE DRAWN: 12-14-2009		
FINISH:	STANDARD TOLERANCE: .00 ±.01 FRACTIONS: .000 ±.005 ±1/16" ANG. ±.5°	LOC ACAD: Z:/Projects/Projects 2009/C30/	STYLE: Riviera Ring Top
Digger Specialties, Inc. 3446 US 6 EAST Bremen, IN 46506	DRAFT: 20091214-1	LOC PDF: Z:/Projects/Projects 2009/C30/	FILE NAME: C30R 3 foot stair mark — REV.